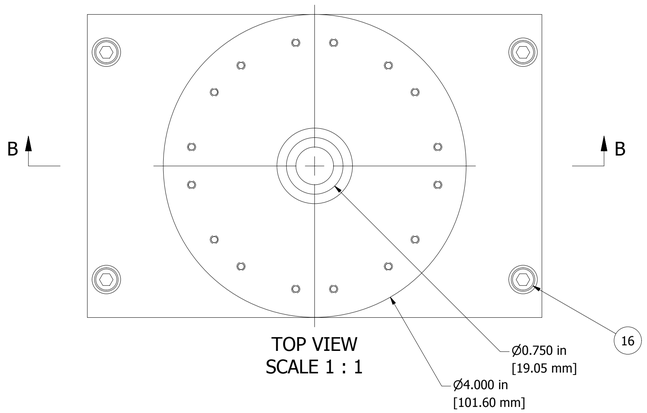

TOP VIEW
SCALE 1 : 1

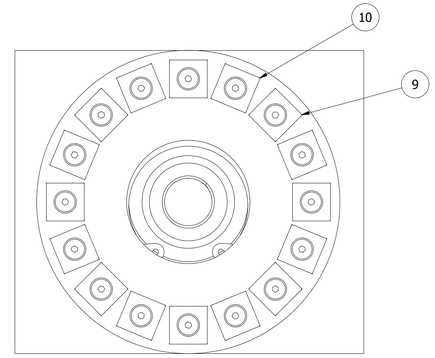

SECTION D-D
SCALE 1 : 1

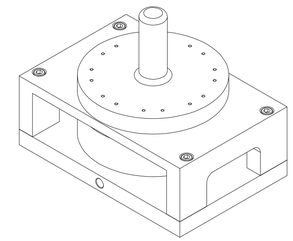

3D VIEW
SCALE 1 / 2

PARTS LIST			
ITEM	QTY	PART NUMBER	DESCRIPTION
1	1	Mag_Reduction_high_speed_rotor	
2	1	Mag_Reduction_low_speed_rotor	
3	1	Mag_Reduction_pole_disc_plate	
4	16	Mag_Reduction_pole_piece	
5	1	Mag_Reduction_base_shaft	
6	1	Mag_Reduction_base_plate	
7	4	NB034-0 N - http://www.magnet4less.com	Neodymium Magnets 1 in x 1/2 in x 1/4 in Bar w/2 Countersunk Holes - Model# NB034-0
8	4	NB034-0 S - http://www.magnet4less.com	Neodymium Magnets 1 in x 1/2 in x 1/4 in Bar w/2 Countersunk Holes - Model# NB034-0
9	8	B884DCS - http://www.kjmagnetics.com	Neodymium Magnets 1/2 in x 1/2 in x 1/4 in Thick.
10	8	B884DCN - http://www.kjmagnetics.com	Neodymium Magnets 1/2 in x 1/2 in x 1/4 in Thick.
11	1	2780T620 - High-Load Steel Ball Bearing Dbl Sealed	High-Load Steel Ball Bearing Dbl Sealed, for Shaft Dia 5/8" X 1-5/8" OD X 1/2" W - McMaster Carr PN 2780T620 or equivalent.
12	2	99142A560 - Internal Retaining Ring	Black-Finish Steel Internal Retaining Ring - McMaster Carr PN 99142A560 or equivalent.
13	2	91665A430 - External Retaining Ring	Steel Spiral External Retaining Ring - McMaster Carr PN 91665A430 or equivalent.
14	16	ANSI B18.3 - 6-32 UNC x 0.5	Hexagon Socket Flat Countersunk Head Cap Screw
15	16	ANSI B18.3 - 4-40 UNC x 0.5	Hexagon Socket Flat Countersunk Head Cap Screw
16	4	ANSI B18.3 - 10-32 UNF - 2 HS HCS	Hexagon Socket Head Cap Screw

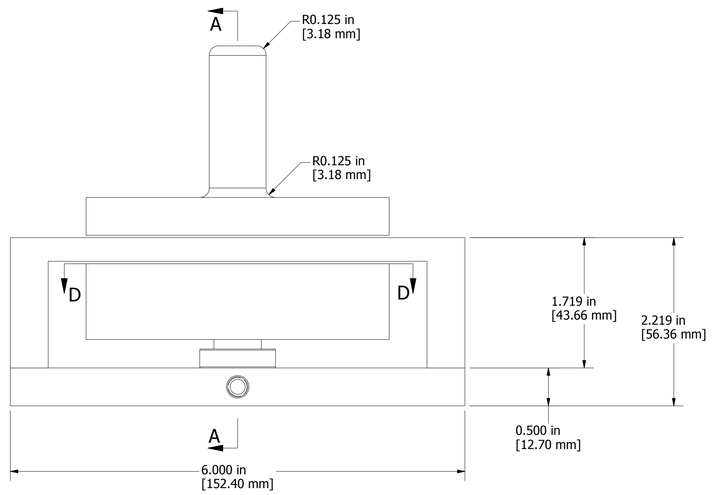

FRONT VIEW
SCALE 1 : 1

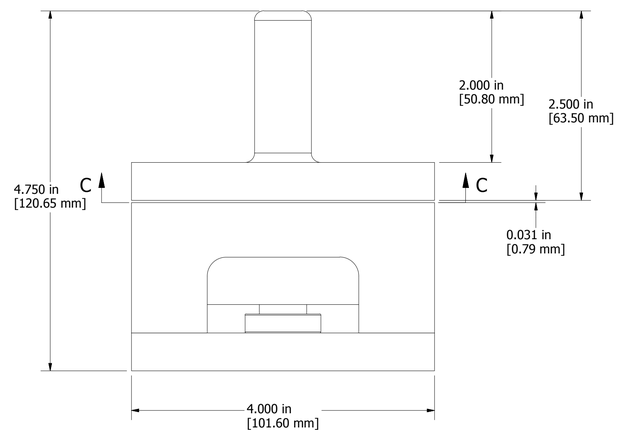

SIDE VIEW
SCALE 1 : 1

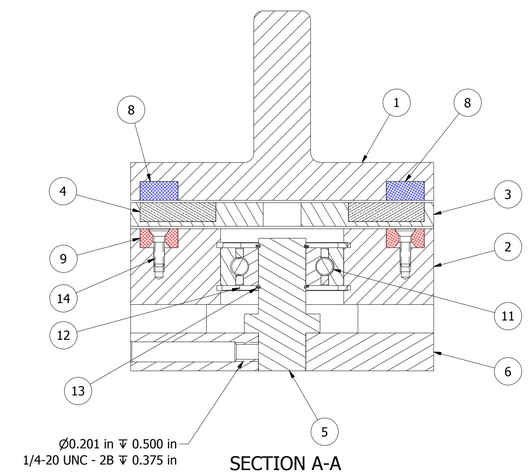

SECTION A-A
SCALE 1 : 1

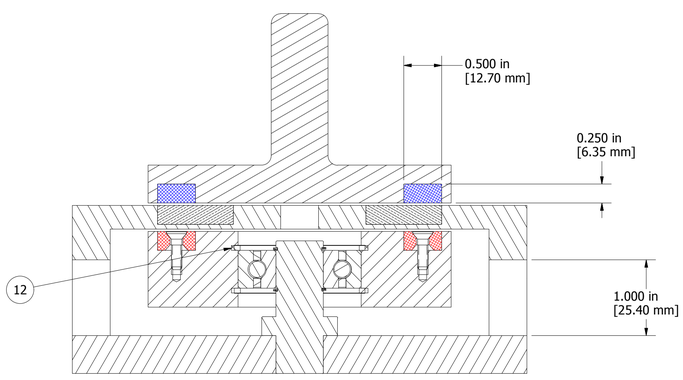

SECTION B-B
SCALE 1 : 1

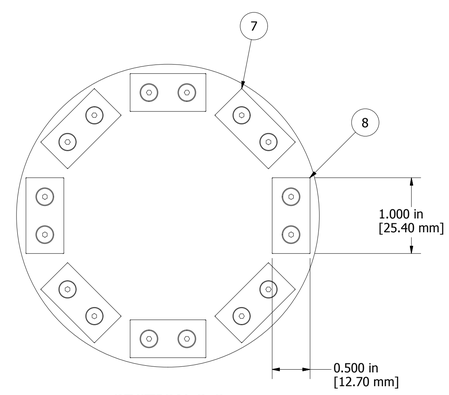

SECTION C-C
SCALE 1 : 1

Copyright 2012 - Infinity Turbine, LLC

Turbine/Housing Covered Under
Patents: 7146999, 7726331

PROPRIETARY AND CONFIDENTIAL

THE INFORMATION CONTAINED IN THIS DRAWING IS THE SOLE PROPERTY OF INFINITY TURBINE, LLC. ANY REPRODUCTION IN PART OR AS A WHOLE WITHOUT THE WRITTEN PERMISSION OF INFINITY TURBINE, LLC IS PROHIBITED.

UNLESS OTHERWISE NOTED:
DIMENSIONS ARE IN INCHES
TOLERANCES:
FRACTIONAL ±
ANGULAR: MACH ± 0.1 BEND ±
TWO PLACE DECIMAL ± 0.01
THREE PLACE DECIMAL ± 0.002
INTERPRET GEOMETRIC TOLERANCING PER: ANSI Y14.5
MATERIAL: 756 Aluminum or Equivalent
FINISH: N/A
DO NOT SCALE DRAWING

DRAWN	Eddie	11/20/2012
CHECKED		
QA		
MFG		
APPROVED		

INFINITY TURBINE®

TITLE: Magnetic Reduction Coupler

SIZE: D | DWG NO: 4in_Magnetic_Reduction_Coupler | REV

SCALE | SHEET 1 OF 1