NOTES:

THE SYMBOL ◁ DENOTES THE APPLICABLE NOTE WHEN REFERENCED IN THE FIELD OF THE DRAWING

1 -SEE INSTALLATION MANUAL, PRMAN66798, FOR DESIGN PRESSURES AND TEMPERATURES

2 -ALL PRESSURE PIPING FABRICATION, MATERIALS, AND CODE FOR POWER PIPING PROCEDURES SHALL COMPLY WITH ASME/ANSI B31.1

3 -RECOMMENDED CUSTOMER MATERIAL & SPECIFICATIONS:
- a) PIPING TO BE SCH 40 A106 GR. B C.STEEL.
- b) FLANGES PER CLASS STATED, A105 C.STEEL PER ASME/ANSI B16.5.
- c) PRESSURE PIPING FASTENERS TO BE:
  FASTENERS SA193 GR. B7 C.STEEL NUTS SA194 GR. 2H C.STEEL
- d) NON-PRESSURE COMPONENT FASTENERS TO BE:
  ZINC-PLATED, ANSI/ASME THREADED SAE GR. 5 OR GR. 8 OR ASTM A449 FASTENERS

4 -PRESSURE TEST ALL FIELD WELDS AND VERIFY LEAK TIGHTNESS. SEE INSTALLATION MANUAL, PRMAN66798, FOR SYSTEM SPECIFIC REQUIREMENTS

5 -EXISTING WELDS ON POWER MODULE UNIT DO NOT HAVE TO BE PRESSURE TESTED.

6 -ALL GASKETS TO BE FLEXITALLIC FLEXICARB SPIRAL-WOUND GASKET WITH INNER RINGS OR EQUIVALENT PER ASME B16.20, METALLIC GASKETS FOR PIPE FLANGES - RING-JOINT, SPIRAL-WOUND, AND JACKETED

7 -EQUIPMENT AND PIPING SUPPORTS SUPPLIED BY CUSTOMER. DESIGN AND BUILD PER LOCAL BUILDING CODES

8 -ALL ELECTRICAL EQUIPMENT SHALL BE INSTALLED PER NATIONAL ELECTRICAL CODE-2002

9 -INSULATION RECOMMENDED TO MINIMIZE HEAT LOSS AND REDUCE SURFACE TOUCH TEMPERATURE ON EVAPORATOR INLET PLUMBING

◁ 10 -MAXIMUM SLOPE OF CONCRETE PAD TO BE 1/4 OF AN INCH OF HEIGHT CHANGE, IN 10 FEET OF LENGTH

◁ 11 -PURGE UNIT FIELD CONNECTION

◁ 12 -UNIT TIEDOWN HARDWARE TO BE SELECTED TO MEET LOCAL BUILDING CODE SEISMIC REQUIREMENTS

◁ 13 -VERTICAL FORCE AT TIEDOWN INTERFACE

◁ 14 -REFRIGERANT RECOVERY PORT

◁ 15 -PRESSURE RELIEF VALVE EXHAUST PIPING FIELD CONNECTION. CUSTOMER RESPONSIBLE FOR SUPPLYING PARTS. DESIGN AND ASSEMBLY PER ASHRAE 15 AND/OR LOCAL BUILDING CODE.

◁ 16 -

◁ 17 -THERMAL SOURCE INLET SIZE:
- CONFIGURATION A: 6", 150# FLANGE
- CONFIGURATIONS B & C: 8", 150# FLANGE

◁ 18 -THERMAL EXIT INTERFACE DIMENSIONS:
- CONFIGURATION A: 24.1 ± 1.0
- CONFIGURATIONS B & C: 36.4 ± 1.0

19 -U.O.S., TOLERANCED DIMENSIONS ARE CERTIFIED ACCURATE

20 -SEE INSTALLATION MANUAL, PRMAN66798, FOR SPECIFIC RIGGING REQUIREMENTS

◁ 21 -CUSTOMER CONNECTION TO BE MADE AT INTERFACE WITH ZERO OPERATIONAL LOAD TO UNIT

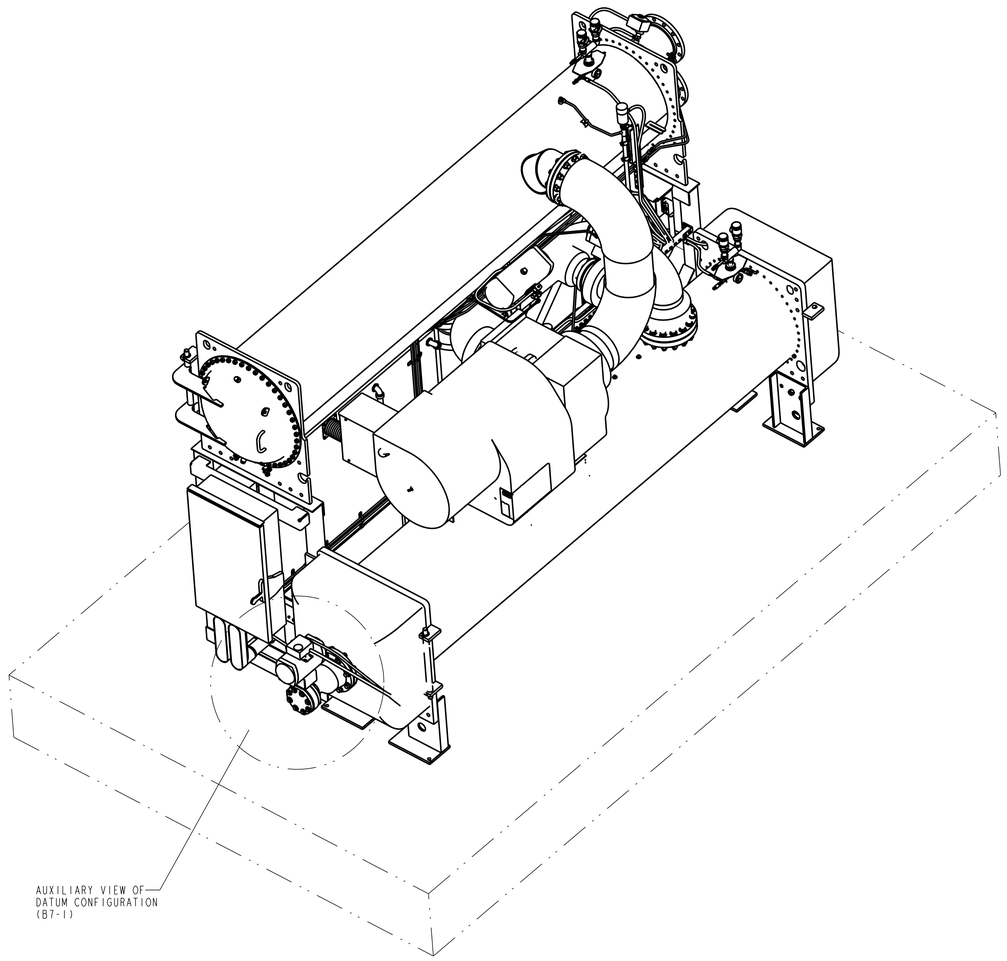

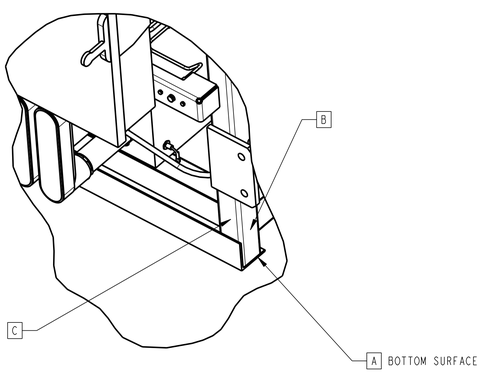

AUXILIARY VIEW OF DATUM CONFIGURATION
SCALE 1/8
(EVAPORATOR REMOVED FOR CLARITY)
(D6-1)

REVISIONS

REV	ZONE	PART DASH NO. REV	DESCRIPTION	DATE	APPROVED
A			INITIAL RELEASE		
B			ADDED:TABLE FOR BILL OF MATERIALS:CONFIGURATION 2, BILL OF MATERIAL: CONFIGURATION 1, FLAGNOTE 17 & FLAGNOTE 18; WAS: IN BILL OF MATERIAL: CONFIGURATION 1, "PWR63850-01", "POWER MODULE UNIT", "SHEET 3 FLAGNOTE 17", NOTE 17: "CONFIGURATION SHOWN ON DRAWING FOR UNITS 1 THRU 20", NOTE 18: INTERFACE DIMENSIONS SUBJECT TO CHANGE FOR UNITS 21 THRU 45"; SEE SHEETS 2 THRU 4	2007-08-27 S. LANGE	- 07-1617
C			ALL VIEWS UPDATED TO DEPICT LATEST CONFIGURATION; ADDED: CONFIGURATION 3, NOTES 20 & 21; REFORMATED TABLES FOR BILL OF MATERIALS TO PARTS LIST, POWER MODULE WEIGHTS WERE 26500 LBS; WAS: NOTE 4, "...INSTALLATION MANUAL FOR SYSTEM...", NOTE 10, "...AN INCH IN 10 FEET OF LENGTH HEIGHT CHANGE", NOTE 12, "...ALL UNIT...TO BE 3/4-10 UNC", NOTE 17, "CONFIGURATION 1: 8"...CONFIGURATION 2: 6"...", NOTE 18,"...CONFIGURATION 1: 36.4...CONFURATION 2: 24.1...,"DRAWING LEVEL 1; DELETED: NOTE 16, "VALVE TO BE FIELD INSTALLED", FROM AUX VIEW, HARDWARE; SEE SHEETS 2 THRU 4	2008-01-02 S. LANGE	- 07-2719
D			WAS: IN PARTS LIST, ITEM 2 REMARKS,"3000"; SEE SHEETS 2 THRU 4	2008-06-05 S. LANGE	- 08-1551

C	B	A	FIND NO.	PART OR IDENTIFICATION NO.	PART REV	NOMENCLATURE OR DESCRIPTION	REMARKS	SHIPPING WEIGHT (LBS)
10	10	10	3	PP47-35		OIL, TURBINE LUBRICATION	UOM = GAL	65
3K	3K	3K	2	PRMS59996-01		REFRIGERANT	UOM = LBS	3200
1			1	PWR63850-24AACAE06-		POWER PLANT ASSY, 225KW, GEOTHERMAL	SEE NOTES 17 & 18	28500
	1		1	PWR63850-24AABAE06-		POWER PLANT ASSY, 225KW, GEOTHERMAL	SEE NOTES 17 & 18	28500
		1	1	PWR63850-24AAAAE06-		POWER PLANT ASSY, 225KW, GEOTHERMAL	SEE NOTES 17 & 18	28500
QTY PER CONFIG								

PARTS LIST

WARNING

COPYRIGHT © 2007, 2008 UTC POWER CORPORATION.
THIS DOCUMENT IS THE PROPERTY OF UTC POWER CORPORATION (UTCP) AND CONTAINS PROPRIETARY AND CONFIDENTIAL INFORMATION OF UTCP. YOU MAY NOT POSSESS, USE, COPY OR DISCLOSE THIS DOCUMENT OR ANY INFORMATION IN IT, FOR ANY PURPOSE, INCLUDING WITHOUT LIMITATION, TO DESIGN, MANUFACTURE OR REPAIR PARTS, OR OBTAIN ANY GOVERNMENT APPROVAL TO DO SO, WITHOUT UTCP'S EXPRESS WRITTEN PERMISSION. NEITHER RECEIPT NOR POSSESSION OF THIS DOCUMENT ALONE, FROM ANY SOURCE, CONSTITUTES SUCH PERMISSION. POSSESSION, USE, COPYING OR DISCLOSURE BY ANYONE WITHOUT UTCP'S EXPRESS WRITTEN PERMISSION IS NOT AUTHORIZED AND MAY RESULT IN CRIMINAL AND/OR CIVIL LIABILITY.

D	D	D	D	REV	SHEET INDEX
4	3	2	1	SHEET	

UNLESS OTHERWISE SPECIFIED
FILLET RAD(1) .020-.040
BREAK EDGES .003-.025
SURFACE FINISH: GENERAL 125
[ ] SI METRIC IN MILLIMETERS
DRAWING INTERPRETATION PER ASME Y14.100-2000
THREAD PER ASME B1.1
△ MARK PER FCPS43945
UNIT OF MEASURE: EA
TOLERANCE: X = ±.060 XXX = ±.010 XX = ±.030 ANGLES = ±2°

THIRD ANGLE PROJECTION
DO NOT SCALE DRAWING
DIMENSIONS IN INCHES

DRAWN	S. LANGE	2007-04-27
CHECKED		
DESIGN	T. CURRAN	2007-08-03
MFG		
QUALITY		
PROJECT	S. BREEN	2007-08-03
PROGRAM	T. CLARK	2007-08-03
LEVEL	N/A	
ORIGINAL RELEASE:	07-0794	

UTC Power
A United Technologies Company

PURECYCLE GEOTHERMAL POWER SYSTEM INSTALLATION DRAWING

SIZE	CAGE CODE	DRAWING NO.	REV
E	1F2J4	APP66344	D

SCALE: 1/16 | WEIGHT EST: | SHEET 1 OF 4

REF DRAWING:
LAST LTR USED K
ORIGINAL MODEL: PC51

PRO-E GENERATED REV: A UTCP_E_NO_PL_2007

REVISIONS				
REV	ZONE	DESCRIPTION	DATE	APPROVED
A		INITIAL RELEASE		
B		WAS: (1) FLAG NOTE 18 36.4±1.0, (2) FLAG NOTE 18 40.9±1.0, (3) "THERMAL SOURCE INLET 8" 150# RAISED...FLAG NOTE 18"	2007-08-27 S. LANGE	- 07-1617
C		ALL VIEWS UPDATED TO DEPICT LATEST CONFIGURATION; ADDED:(1) FLAG NOTE 21, (2) TO TOP AND TURBINE SIDE VIEWS, CENTER OF GRAVITY SYMBOL AND DIMENSIONS; WAS: (3), 25.8±1.0, (4), 219.6; DELETED: (5) BREAKOUT	2008-01-02 S. LANGE	- 07-2719
D		ADDED: (1) DIMENSION; WAS: (2) "3 FT MINIMUM ... ALL AROUND", (3) 90.1 MAX, (4) (A3-4)	2008-06-05 S. LANGE	- 08-1551

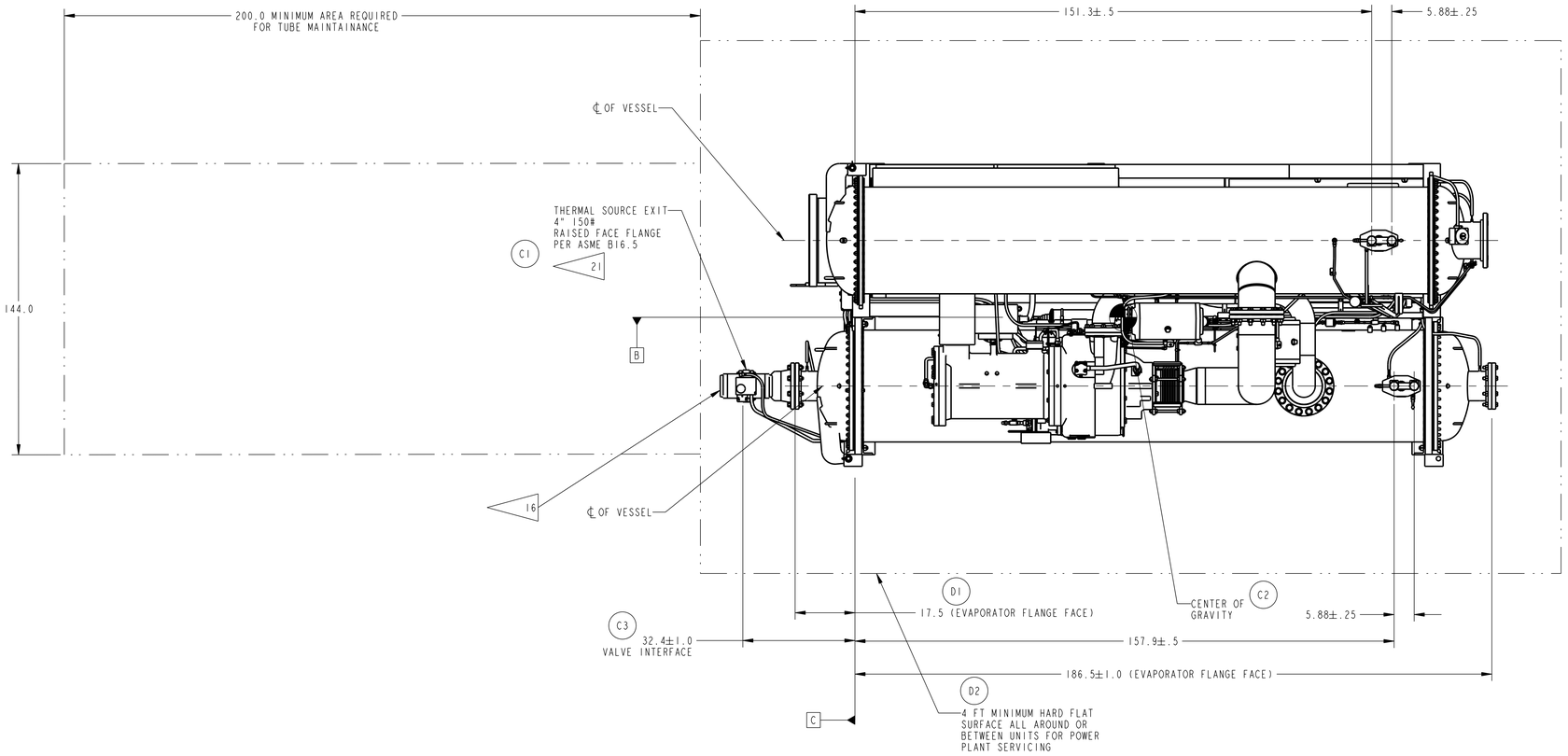

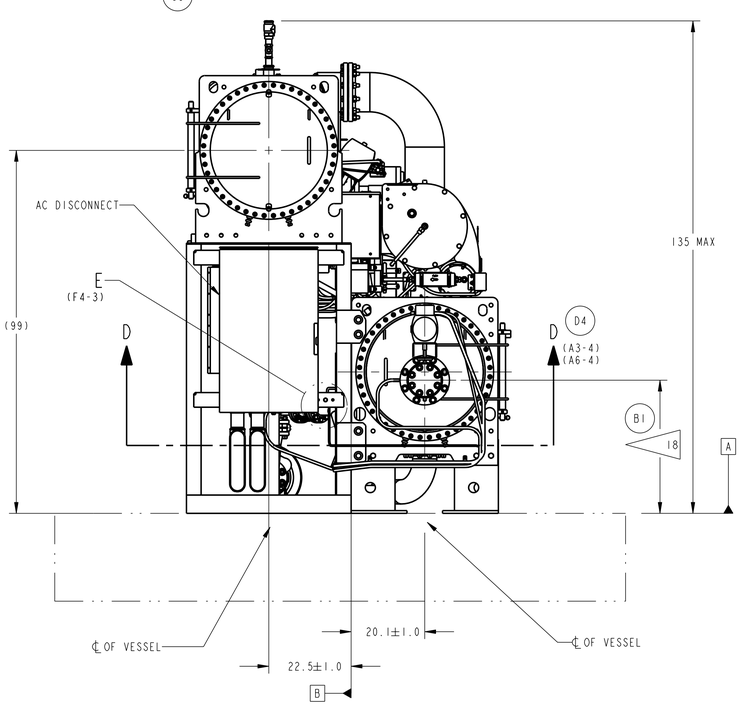

THERMAL SOURCE EXIT

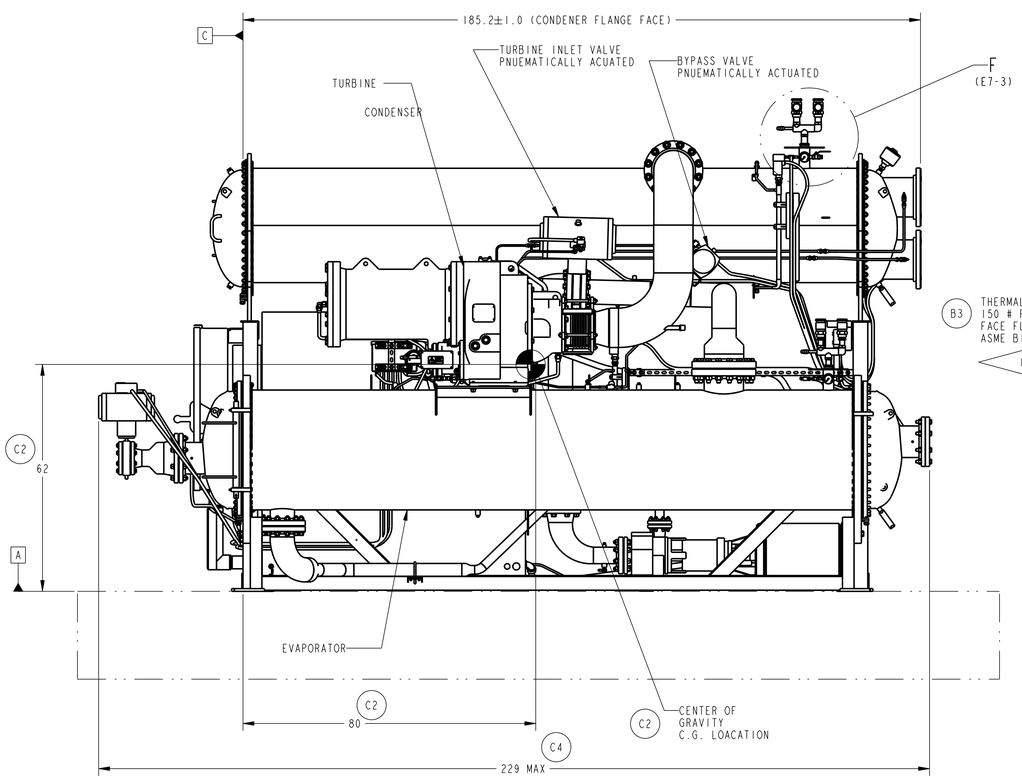

TURBINE SIDE

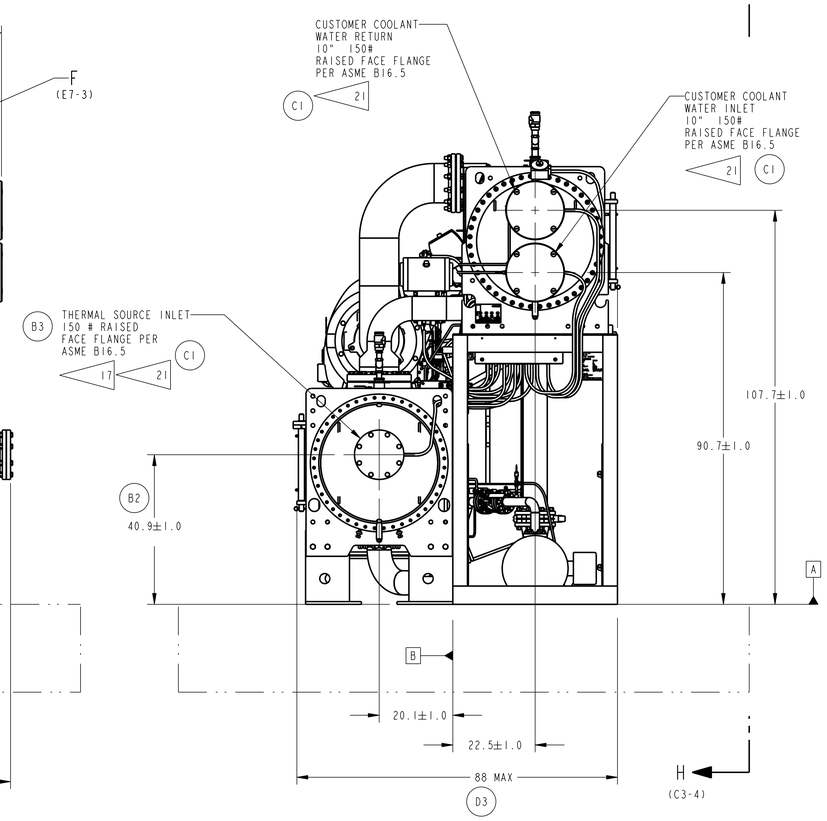

THERMAL SOURCE INLET

INSULATION REMOVED FOR CLARITY

DISCLOSURE OF INFORMATION ON THIS PAGE IS SUBJECT TO THE NOTICE ON THIS DOCUMENTS FIRST OR TITLE PAGE.

DRAWN	S. LANGE	2007-04-27
CHECKED		

UTC Power
A United Technologies Company

SIZE	CAGE CODE	DRAWING NO.	REV
E	1F2J4	APP66344	D
SCALE: 1/16			SHEET 2

PRO-E GENERATED REV: A UTCP-E-NO-PL-2001

REVISIONS				
REV	ZONE	DESCRIPTION	DATE	APPROVED
A		INITIAL RELEASE		
B		1.) DELETED: (1) "PURGE UNIT CONNECTION SIZE 1/2" NPT FLAGNOTE 11". 2.) CUSTOMER PNEUMATIC CONNECTION WAS " 1/2" 45° FLARE PER SAE J513	2007-08-27 S. LANGE	- 07-1617
C		ALL VIEWS UPDATED TO DEPICT LATEST CONFIGURATION; ADDED: (1), FLAGNOTE, (2) DIMENSION; WAS, (3), " . .SIZE 1/2" COMPRESSION FITTING, PARKER PT NO. 68C-8-8"	2008-01-02 S. LANGE	- 07-2719
D		ADDED: (1) DIMENSION, (2) SECTION K-K ARROWS, SECTION K-K; WAS: (3) (A4-3)	2008-06-05 S. LANGE	- 08-1551

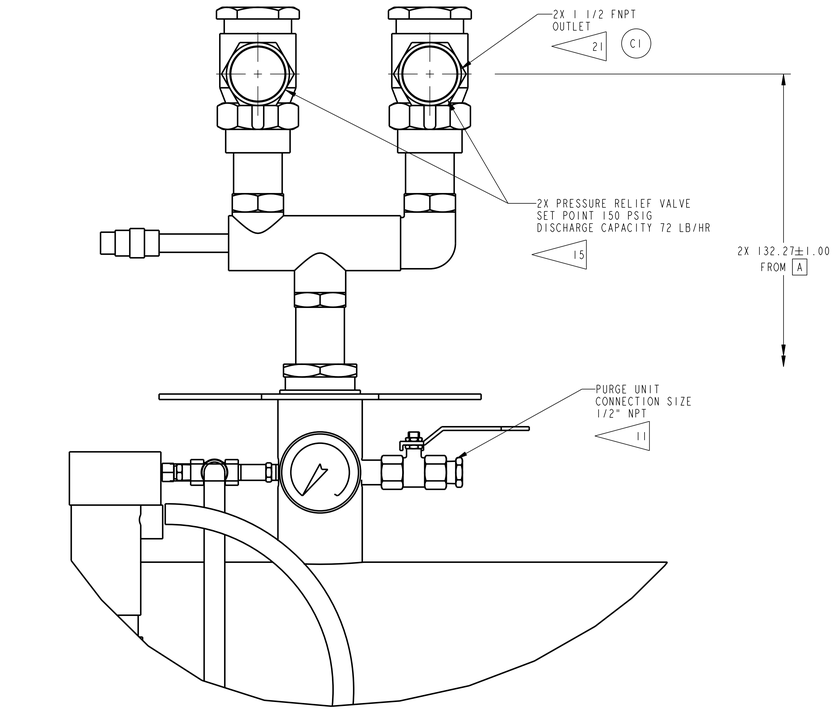

VIEW F (E3-2)
SCALE 1/2
CONDENSER PRESSURE
RELIEF VALVE

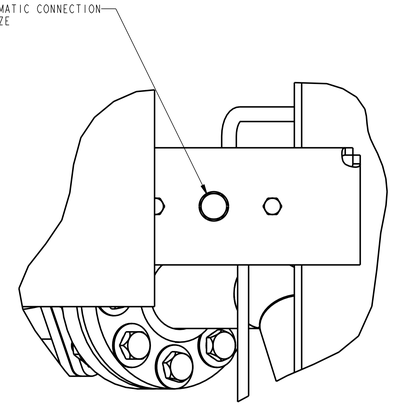

VIEW E (C8-2)
SCALE 1/2

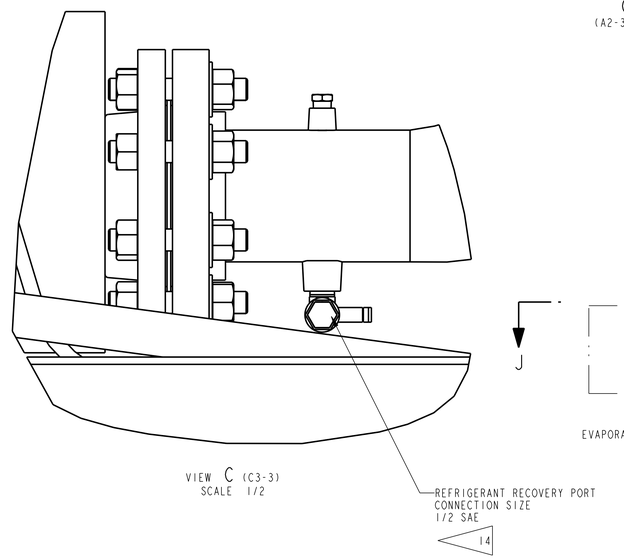

VIEW C (C3-3)
SCALE 1/2

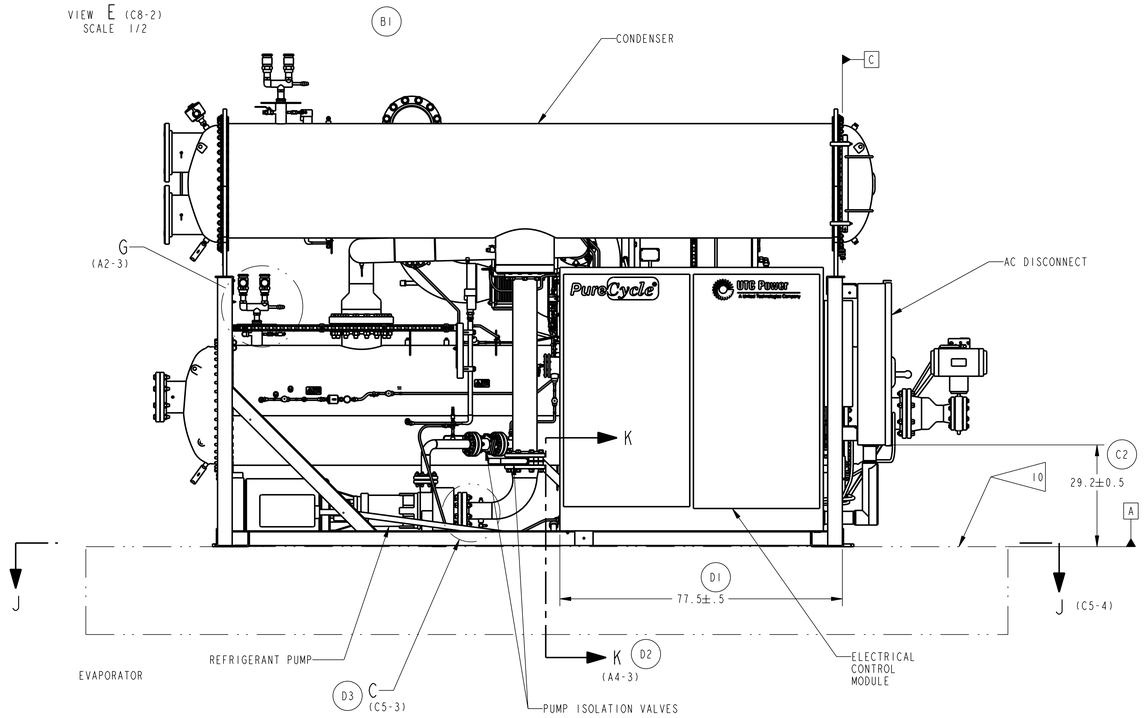

VIEW H-H (B1-2)
(JUNCTION BOX AND WHIPS
REMOVED FOR CLARITY)

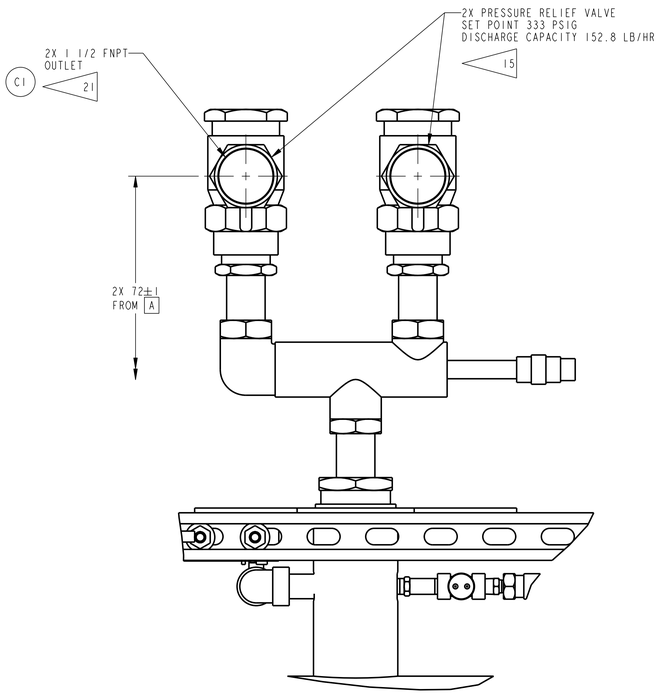

VIEW G (E4-3)
SCALE 1/2
EVAPORATOR PRESSURE
RELIEF VALVE

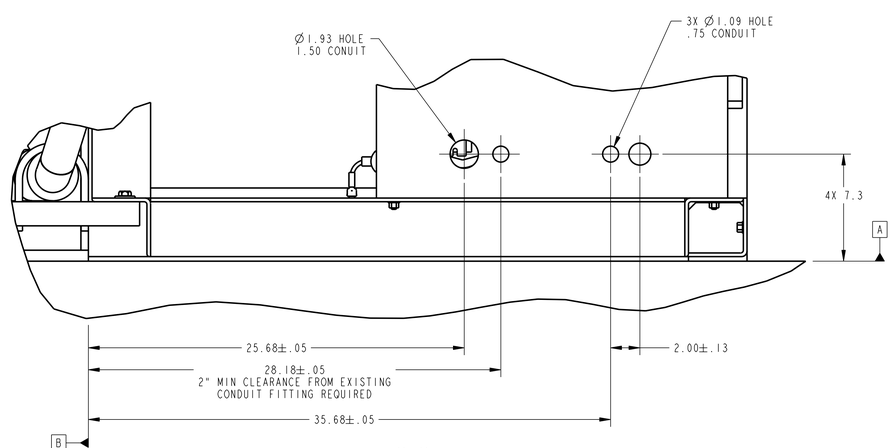

SECTION K-K (D3-3)
SCALE 1/2
WHIPS REMOVED FOR CLARITY

INSULATION REMOVED FOR CLARITY

DRAWN	S. LANGE	2007-04-27
CHECKED		

UTC Power
A United Technologies Company

SIZE	CAGE CODE	DRAWING NO.	REV
E	1F2J4	APP66344	D

SCALE: 1/16 SHEET 3

DISCLOSURE OF INFORMATION ON THIS PAGE IS SUBJECT TO THE NOTICE ON THIS DOCUMENTS FIRST OR TITLE PAGE.

UTCP.E.NO.PL.2001 REV: A PRO-E GENERATED

REVISIONS				
REV	ZONE	DESCRIPTION	DATE	APPROVED
A		INITIAL RELEASE		
B		WAS:(1) 2.0,(2) 2X 42.63±.13,(3) 6.63, (4) 5.5±.25,(5) 14.25±.75 FROM B	2007-08-27 S. LANGE	- 07-1617
C		ALL VIEWS UPDATED TO DEPICT LATEST CONFIGURATION; WAS:(1) 10410#,(2) 7100#,(3) 10575#, (4) 7250#	2008-01-02 S. LANGE	- 07-2719
D		ADDED: VIEW D-D FOR ALL OTHER CONFIGURATIONS; WAS: (1) VIEW D-D (C7-2), (2) 4X 7.49±.50	2008-06-05 S. LANGE	- 08-1551

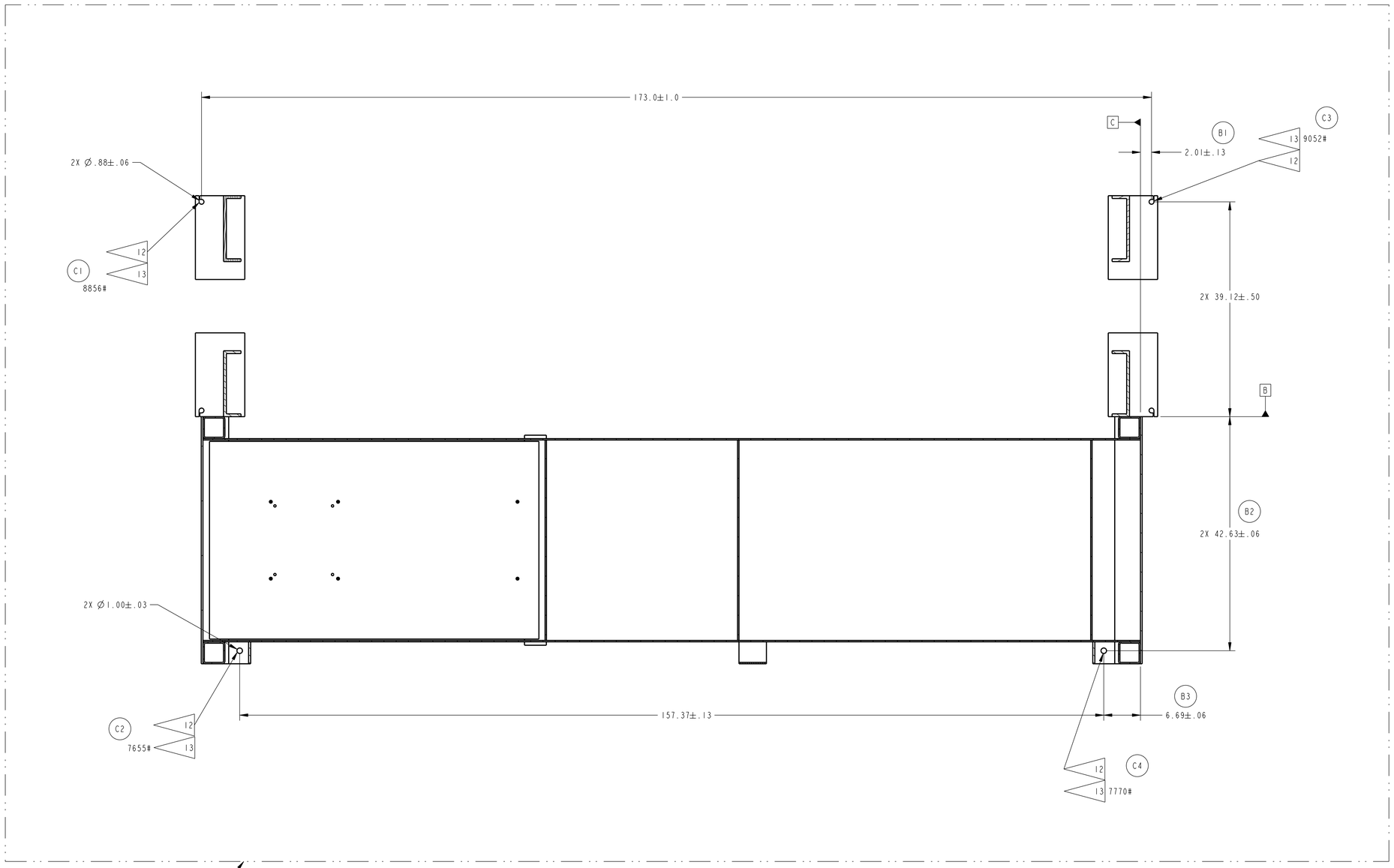

PAD TO ALLOW 36 INCH CLEARANCE AROUND THE ENTIRE SYSTEM

SECTION J-J (D1-3)
1/8 SCALE

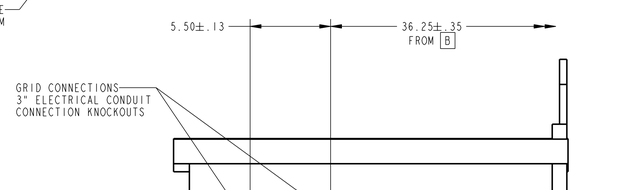

VIEW D-D (C7-2)
SCALE 1/4
ALL OTHER CONFIGURATIONS

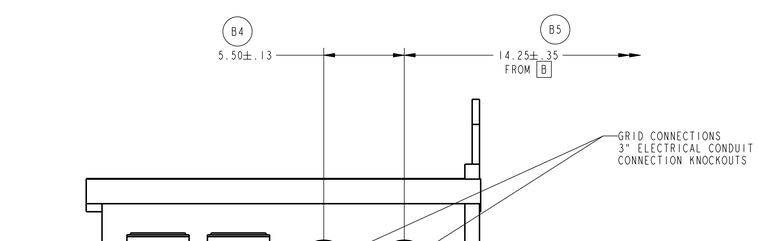

D1
VIEW D-D (C7-2)
SCALE 1/4
CONFIGURATIONS A-C
(SEE PARTS LIST ON SHEET 1)

INSULATION REMOVED FOR CLARITY

DISCLOSURE OF INFORMATION ON THIS PAGE IS SUBJECT TO THE NOTICE ON THIS DOCUMENTS FIRST OR TITLE PAGE.

DRAWN	S. LANGE	2007-04-27
CHECKED		

UTC Power
A United Technologies Company

SIZE	CAGE CODE	DRAWING NO.	REV
E	1F2J4	APP66344	D
SCALE: 1/16			SHEET 4

UTCP-E-NO-PL-2007 REV: A PRO-E GENERATED